LUMIUS

Lumius-series is a state of the art product for demanding applications in various environments. Light fixtures within Lumius-series can be fitted with narrow to wide beam optics, making them suitable for a variety of applications from machine tools to workbenches and vehicles.
Lumius-series has the latest LED-technology with high performance in both intensity and quality of light pattern, as well as a high colour rendering index of over 90. The colour temperature is 4300K which is suitable for demanding tasks. Features low energy consumption and long service life, high vibration durability and virtually no radiated heat from the light beam.
The lamp head is made of aluminium which allows good heat dissipation and good protection against external impact.
Lumius-series have a flexible, gooseneck arm and are available in various lengths. It can be supplied with an external plugin transformer for 230V. The protection class of the transformer is IP44.
Lumius-series IP65 is specifically developed for harsh industrial environments and applications where dust and moisture resistance is vital.
Typical applications are grinders, lathes and drilling machines. The products are also suitable for outdoor use.
Lumius-series DIM is specifically developed for chart board lighting on ships and other vessels. It can also be used in a number of other applications where variable light intensity is necessary. Typical applications are ship bridges and visual inspection of components.
Customized versions are available upon request.

Features Include:

- Arm length 50/70cm with or without swivel joint, spotlight
- LED Service life > 75.000h
- IP20/IP65
- Dimmable almost to zero, it will always start at the lowest intensity
- 12-36VDC
- AC/DC-Adaptor 100-240/12V, IP44 available as accessory

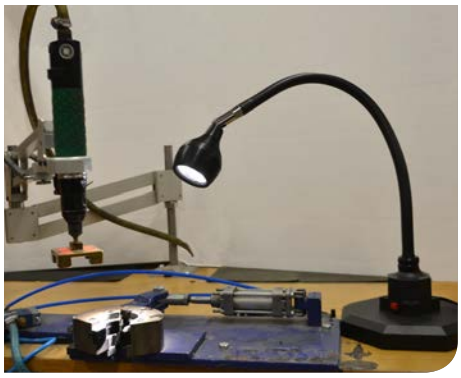

Applications:

- Heavy industrial applications
- Vehicles
- Military & Marine applications, red lens available as accessory

Benefits:

- Long service life
- High quality components
- High quality light pattern
- High colour rendering
- Rugged flexible arm
- Durable design

Sunnex Equipment , Box 2084, 650 02 Karlstad, Sweden
Tel: +46 (0)54 555 160 Web: www.sunnex.se E-mail: info@sunnex.se

Technical Specifications

Supply voltage	12-36VDC, 2m cordset (100-240VAC Plugin AC/DC-adaptor available, IP44)
Power consumption	4 W
Arm length	500 or 700 mm
Colour	Black
Colour temperature	4 300K
IP-rating	IP20 or IP65
Protection Class	Class III
Beam angle	10° std, 25° or 40° accessory
Light output	260Lm, 14400Lx at 50cm distance (10°)
Colour rendering index	CRI: 93
Weight	
Life span	>75.000h

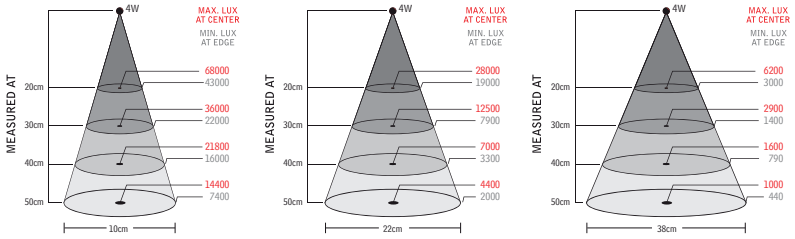

LM 4W, 10° LM 4W, 25° LM 4W, 40°

Model	Arm	Connection	Other	Part. no.
Lumius Flex	500 mm	12-36VDC		30010
			IP65	30013
			Dimmable	30110
			Joint	30015
			Joint + Dimmable	30115
	700 mm	12-36VDC		30030
			IP65	30033
			Dimmable	30130
			Joint	30035
			Joint + Dimmable	30135
Solus 9 spot	40 mm	12-36VDC	Single joint	30011
			Dimmable	30111

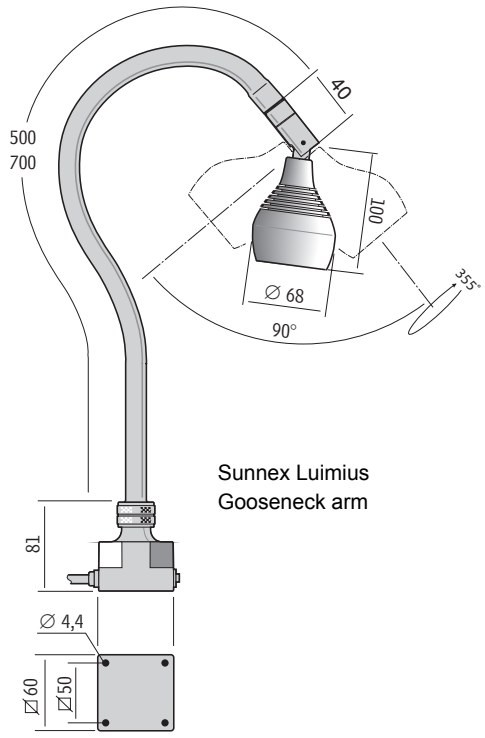

Sunnex Luimius Gooseneck arm

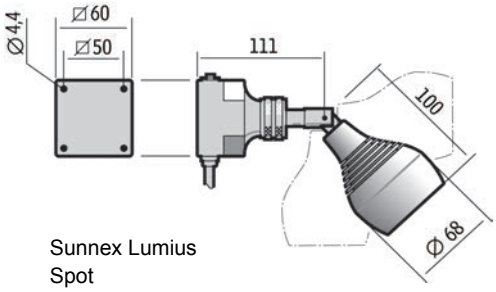

Sunnex Lumius Spot

PSU (100-240V~)

Plug-in Adaptor for Europe 230V
33901

Mounting Accessories

Magnetic base
14000

Table base
14015

C-Clamp
14020

Wall mount
14030

More info about
Accessories
See seperate leaflet
www.sunnex.se

Sunnex Equipment , Box 2084, 650 02 Karlstad, Sweden
Tel: +46 (0)54 555 160 Web: www.sunnex.se E-mail: info@sunnex.se